IPG-STAND33

Product Specification

Appearance

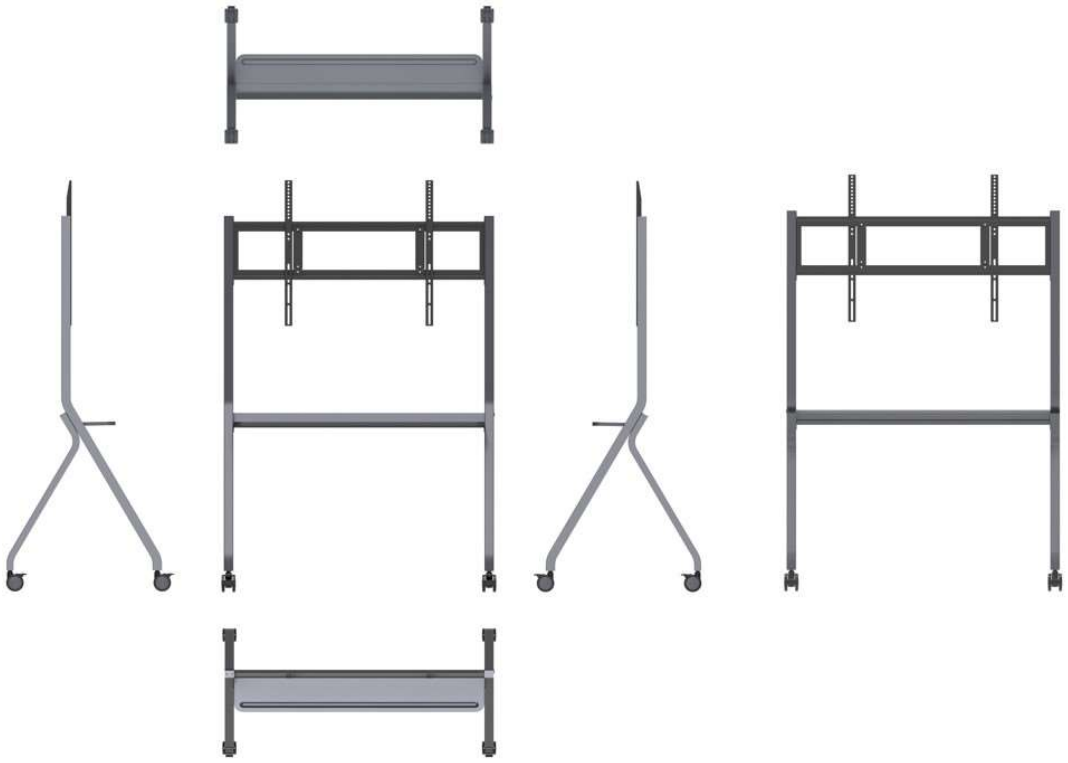

Dimensions

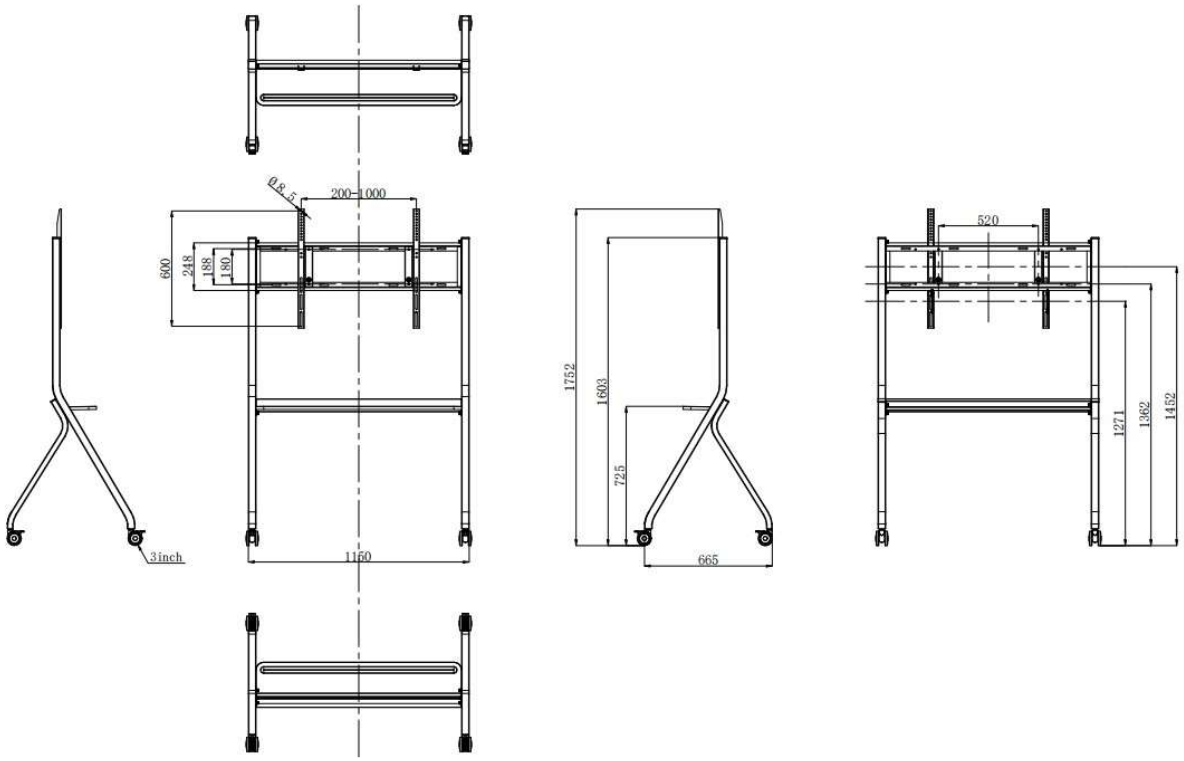

Physical Specifications		
Dimension (L×W×H)		1150×665×1603mm
Dimension with Package (L×W×H)		1630×755×160mm
Net Weight		15.2KG or 16.5KG (include wall mount hanging strip)
Gross Weight		19.2KG or 20.5KG (include wall mount hanging strip)
Max Load		100KG
Max Load Size		Recommend No more than 86 inch
Castor	Size	3inch
	Type (mute /Non-mute)	mute
Matching Wall Mount		WIB6540A/WIB9060F/WIB9060G/WIB9060H
Color		Silver gray (left&right foot,Tray) Black (wall mount)
Accessories		
Screw Accessory Package		×1
Wall mount hanging strip		×2 Optional
Installation Manual		×1
Environmental Conditions		
Operation Temperature		0℃~40℃
Operation Humidity		10%~90%RH
Storage Temperature		-20℃~60℃
Storage Humidity		10%~90%RH

Statement

The product pictures of this specification only indicate that there may be slight difference in product effects (included but not limited to appearance, color and size). Please refer to the product.

Due to the influence of product configuration and manufacturing process, the actual size/weight of the fuselage may differ.

In order to provide accurate specification parameters and product characteristics as much as possible, it is possible to adjust and revise the text description and picture effect of this specification in real time, so as to match the actual product performance, specifications and other information.No special notice will be given if necessary.