JVS-43LED-A 43" LED Monitor

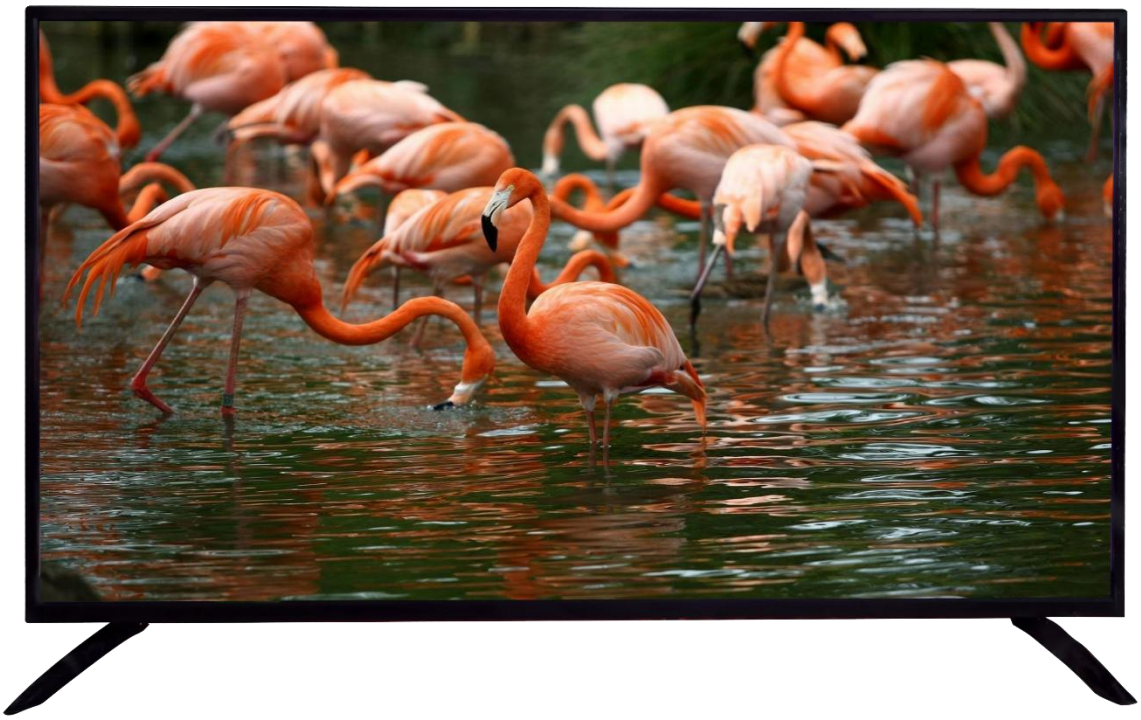

Key Features

1.HD: 3840*2160, 4 times higher than normal monitor.

2. Turn on the screen to automatically detect the resolution of the input signal in the upper right corner of the screen.

3. Clear: delicate and realistic, conveying true colors, showing the true colors.

4. Bright: The quality is improved, only for better presentation.

5. Adopt industrial screen, high brightness, high contrast.

6. High-precision standard regulated power supply, specially designed for industrial equipment, supporting 24 hours × 365 days of uninterrupted work.

7. It adopts full metal casing, strong structure, fireproof, moisture proof and shockproof, especially suitable for equipment that is susceptible to electromagnetic interference.

8. Adopt 10bit image chip processing technology, high pixel progressive scan, fine texture.

9. Support intelligent 3D noise reduction, eliminate afterimage function, dynamic brightness, contrast color optimization technology.

10. Apply the world's leading LED driver solution to accurately restore the front-end signal, with a strong sense of reality.

©2022 Jovision Technology Co., Ltd. All rights reserved.

Note: Design and specifications are subject to change without notice. Under no circumstances, this document shall be reproduced, distributed or changed partially or wholly without formal authorization of Jovision Technology Co., Ltd

11. LED has small volume, low energy consumption, zero radiation, stable image, no impact on the eyes, natural health.

12. 6.5 ms extremely fast response, avoiding the tailing phenomenon of images in high speed operation.

13.Using nanotechnology, the picture is more three-dimensional, transparent.

14.This machine also comes with a splicing function, no external splicer.

Dimension

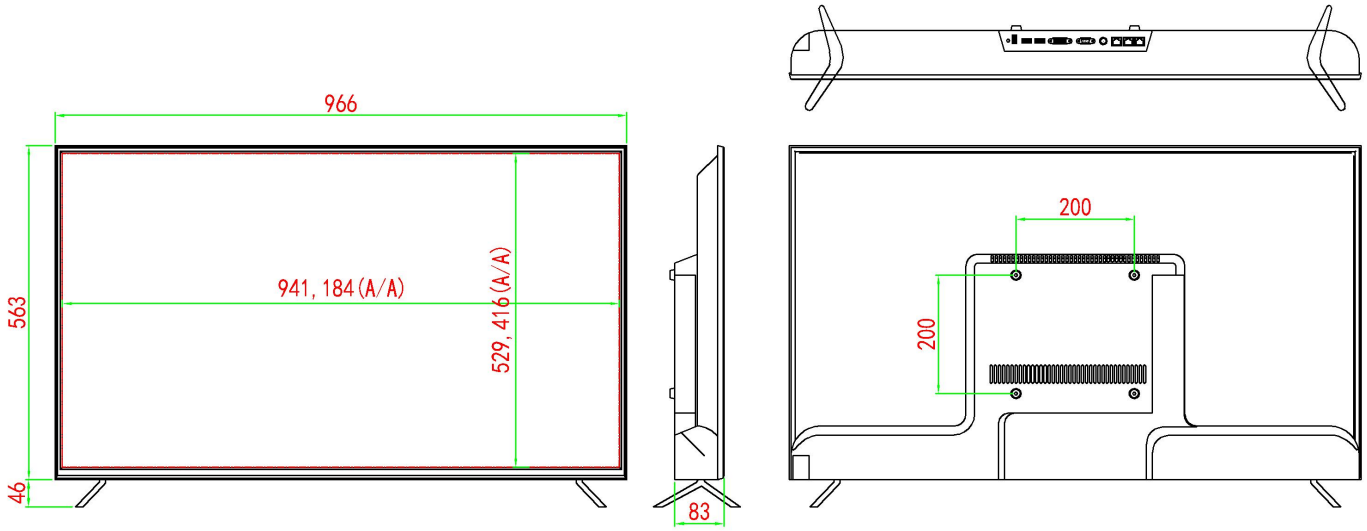

Specification

Product type	Professional Monitor
Product model	JVS-43LED-A
Screen size	43"
Screen type	LED
Screen ratio	16:9
Brightness	400nit
Contrast ratio	5000:1
Response time	6.5 ms
Viewing area	941.184（H）x529.416（V） mm
Viewing angle	wide
Display color	1.07B

©2022 Jovision Technology Co., Ltd. All rights reserved. www.jovisionsecurity.com info@jovision.com
Note: Design and specifications are subject to change without notice. Under no circumstances, this document shall be reproduced, distributed or changed partially or wholly without formal authorization of Jovision Technology Co., Ltd

Clearness	3840*2160
Control method	Panel, infrared
Input port	HDMI*2 VGA*1 USB*1 DVI*1 AV*1 232 *1
Output port	232 * 2
Audio output	2 * stereo speakers
Power supply mode	110-220V/0.7A
Power frequency	50-60Hz
Total power	75W
Casing	professional fireproof iron shell, plastic frame（plastic base）
Dimensions	966mm*563mm*83mm,not including the foot height （ foot height: 46mm）
Installation method	base, wall mount
Product weight	7.3kg
Packing size	1000mm *625mm *110mm
Gross weight	9kg
Packing size	2pcs in 1 case, 1060mm*675mm*270mm
Gross weight	20kg
Working environment temperature	0～50℃
Working environment humidity	10%-90% RH
Storage temperature	- 20℃~ 60℃

©2022 Jovision Technology Co., Ltd. All rights reserved. www.jovisionsecurity.com info@jovision.com
Note: Design and specifications are subject to change without notice. Under no circumstances, this document shall be reproduced, distributed or changed partially or wholly without formal authorization of Jovision Technology Co., Ltd